9WL1424A5001 With pulse sensor

Operating voltage range

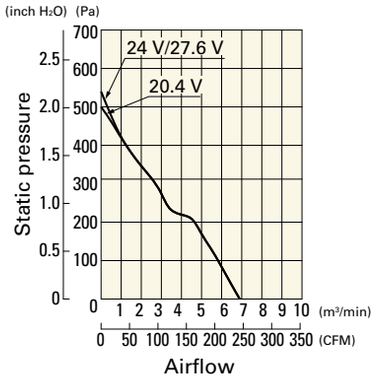

9WL1424H5001 With pulse sensor

Operating voltage range

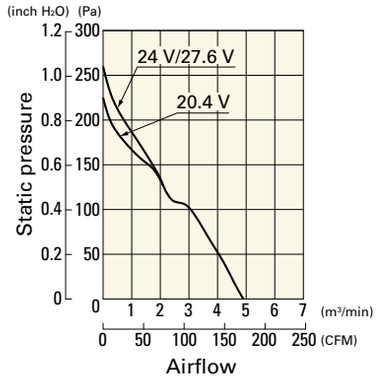

9WL1424M5001 With pulse sensor

Operating voltage range

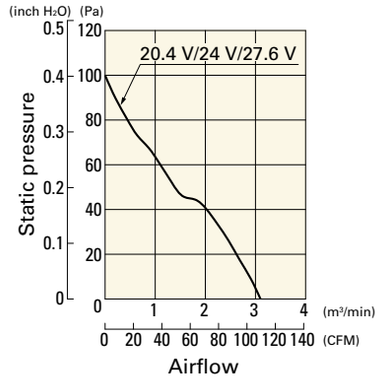

9WL1448A5001 With pulse sensor

Operating voltage range

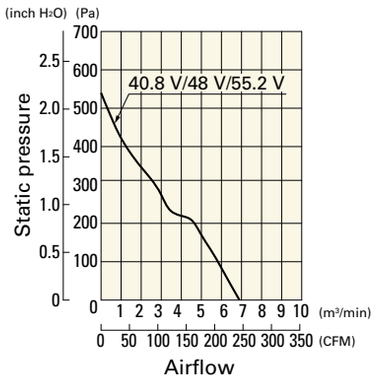

9WL1448H5001 With pulse sensor

Operating voltage range

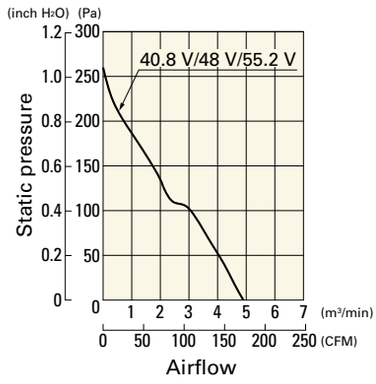

9WL1448M5001 With pulse sensor

Operating voltage range

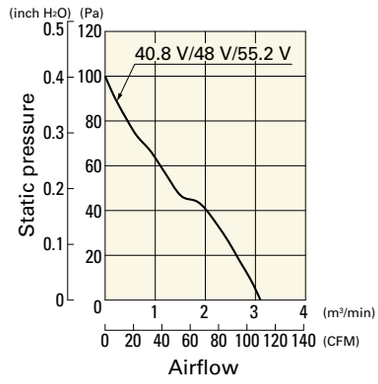

Dimensions (unit: mm) (With pulse sensor with PWM control)

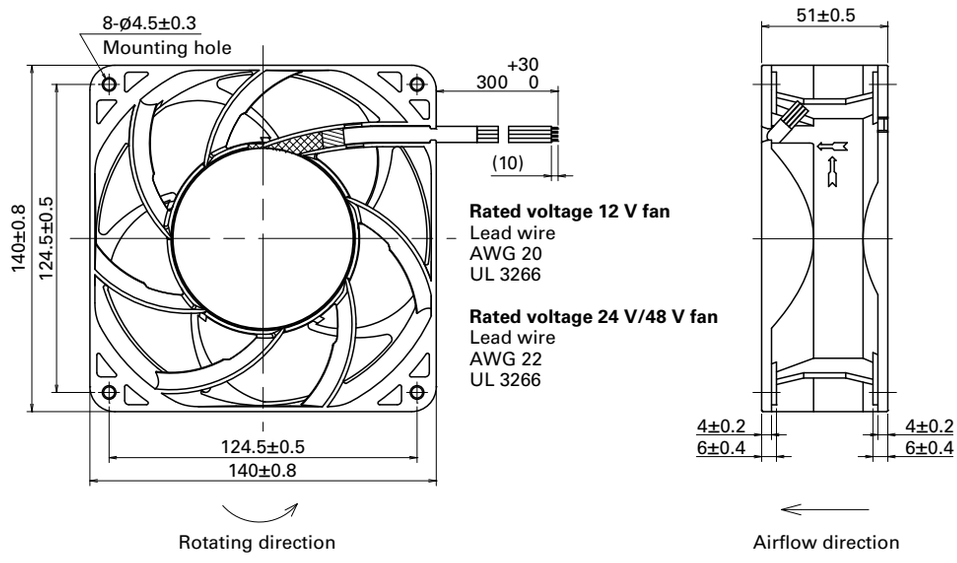

Rated voltage 12 V fan
Lead wire
AWG 20
UL 3266

Rated voltage 24 V/48 V fan
Lead wire
AWG 22
UL 3266

Beijing Hengrui Mechanical and Electrical Equipment Co,Ltd
+86 10-62547612 zhangyu@bjhengrui.cn en.bjhengrui.com

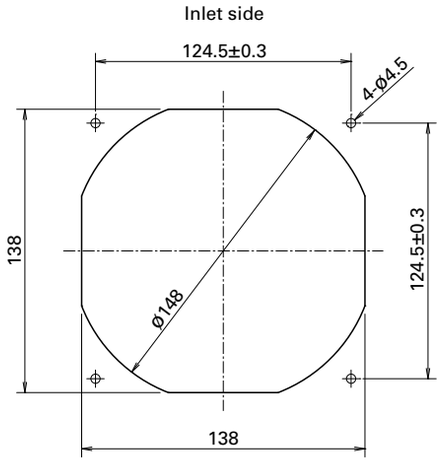

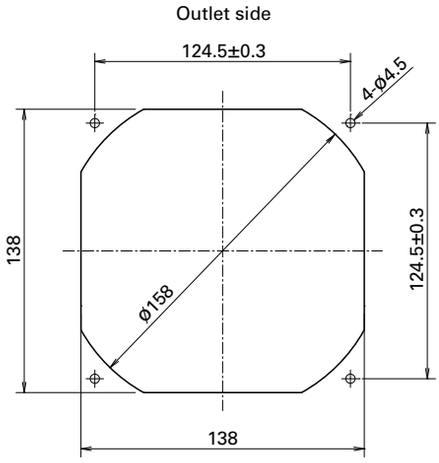

Options

Finger guards page: p. 599

Model no.: 109-719, 109-719H

Beijing Hengrui Mechanical and Electrical Equipment Co,Ltd
+86 10-62547612 zhangyu@bjhengrui.cn en.bjhengrui.com

ø172×150×51 mm

IP68

San Ace 172W 9WG type

Sidecut type

General Specifications

- Material ..... Frame: Aluminum (Black coating), Impeller: Plastic (Flammability: UL 94V-1)
- Expected life ..... See the table below. (L10 life: 90% survival rate for continuous operation in indoor free air at 60°C, rated voltage) Expected life at 40°C is for reference only.
- Motor protection function ..... Locked rotor burnout protection, Reverse polarity protection For details, please refer to p. 616.
- Dielectric strength ..... 50/60 Hz, 500 VAC, for 1 minute (between lead wire conductors and frame)
- Insulation resistance ..... 10 MΩ min. at 500 VDC (between lead wire conductors and frame)
- Sound pressure level (SPL) ..... A-weighted sound pressure level (SPL) at 1 m away from the air inlet.
- Storage temperature ..... -30 to +70˚C (Non-condensing)
- Lead wire ..... ⊕Red ⊖Black Sensor Yellow Control Brown
- Mass ..... 860 g
- Ingress protection ..... IP68 For more information on IP rating, refer to p. 625.

Specifications

The models listed below **have a pulse sensor with PWM control.**

Model no.	Rated voltage [V]	Operating voltage range [V]	PWM duty cycle* [%]	Rated current [A]	Rated input [W]	Rated speed [min⁻¹]	Max. airflow [m³/min]	Max. airflow [CFM]	Max. static pressure [Pa]	Max. static pressure [inchH₂O]	SPL [dB (A)]	Operating temperature [˚C]	Expected life [h]
9WG5748P5G001	48	40.8 to 55.2	100	2.91	140.0	8600	15.46	546	1000	4.02	78	-20 to +70	40000/60˚C (70000/40˚C)
			0	0.21	10.1	2000	3.59	127	75.1	0.3	40		
9WG5748P5H001			100	1.62	78.0	6500	11.6	410	770	3.09	71		
			0	0.21	10.1	2000	3.59	127	75.1	0.3	40		

* PWM frequency is 25 kHz. Models without ratings for 0% PWM duty cycle have zero speed at 0%. When control terminal is open, speed is the same as at 100% duty cycle.

Note: Sensor and control options are available for selection. Refer to the table on p. 661.

Airflow - Static Pressure Characteristics / PWM Duty - Speed Characteristics Example

9WG5748P5G001 With pulse sensor with PWM control

PWM duty cycle

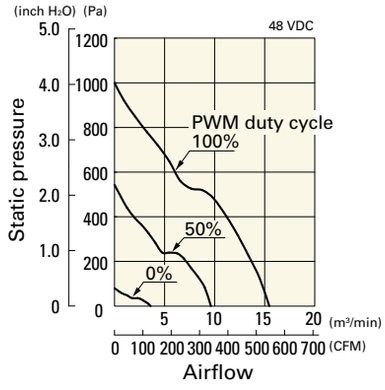

Operating voltage range

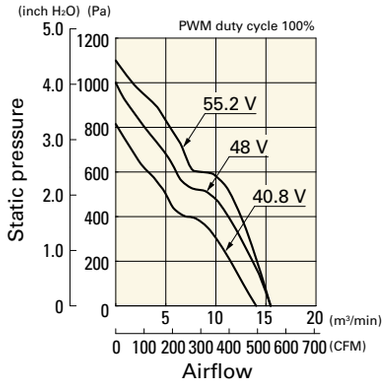

PWM duty - Speed characteristics example

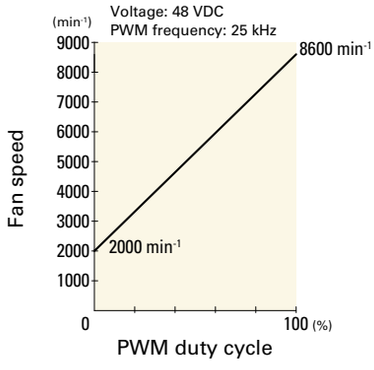

Beijing Hengrui Mechanical and Electrical Equipment Co,Ltd
+86 10-62547612 zhangyu@bjhengrui.cn en.bjhengrui.com

9WG5748P5H001 With pulse sensor with PWM control

PWM duty cycle

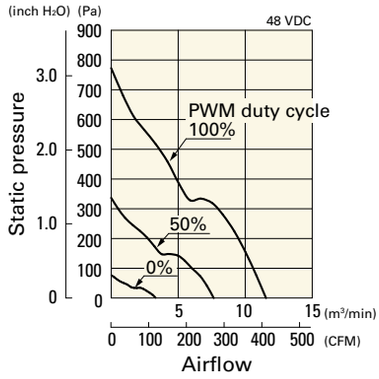

Operating voltage range

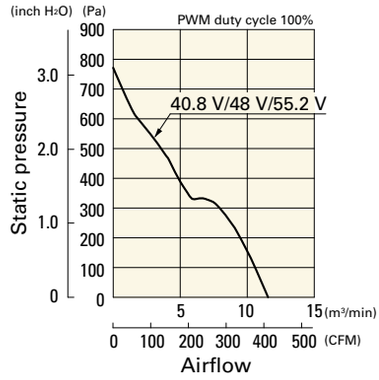

PWM duty - Speed characteristics example

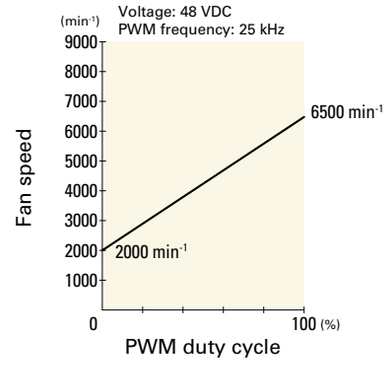

Dimensions (unit: mm)

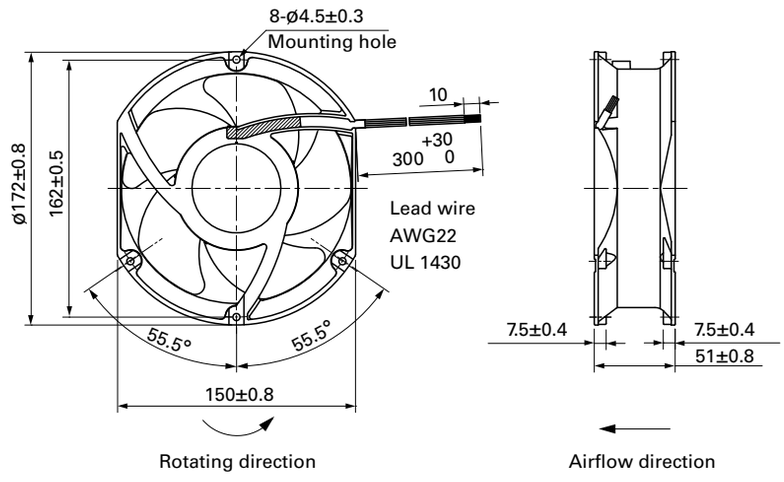

Reference Dimensions of Mounting Holes and Vent Opening (unit: mm)

Inlet side, Outlet side

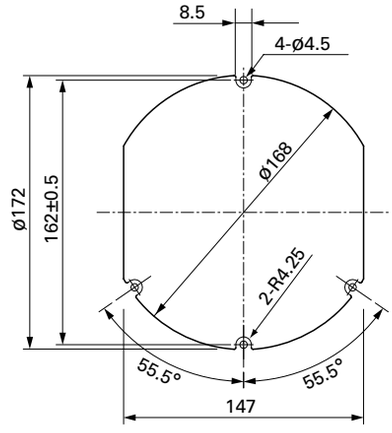

Options

Finger guards page: p. 600

Model no.: 109-1155, 109-1155H

Beijing Hengrui Mechanical and Electrical Equipment Co,Ltd
+86 10-62547612 zhangyu@bjhengrui.cn en.bjhengrui.com

Beijing Hengrui Mechanical and Electrical Equipment Co,Ltd
+86 10-62547612 zhangyu@bjhengrui.cn en.bjhengrui.com